THE DESIGN OF A HIGH-VOLTAGE CHARGE-FEEDBACK PIEZOAMPLIFIER

Maciej A. Noras [a], Jerzy Kieres [a], Karla M. Mossi [b], Kam K. Leang [b]
[a] Trek, Inc., 11601 Maple Ridge Rd., Medina, NY, 14104
[b] Virginia Commonwealth University, Dept. of Mechanical Engineering, 601 West Main St., P.O. Box 843015, Richmond, VA 23284-3015

Abstract:
This paper presents the design and development of a high-voltage charge-feedback amplifier for controlling the displacement of piezoelectric devices to account for hysteresis. In particular, we discuss the details of the design and characterize the performance of the amplifier in terms of output power, bandwidth, and reduction of hysteresis for an experimental piezoactuator. We note that charge-feedback control can minimize the effect of hysteresis in the output displacement of piezos. As a result, precise control of piezos can be achieved for emerging applications such as scanning probe microscopy, micropumps, and actuators for nanomanipulation. The amplifier's effectiveness is demonstrated by applying it to actuate a composite piezoelectric device and results show reduction of hysteresis by over 80%.

Keywords: charge-feedback amplifier, piezoelectric composite, piezo driver

Introduction

Nonlinear voltage-displacement characteristic of piezoelectric transducers, known also as a hysteresis effect, presents a challenge for piezo application designers. For example, in scanning probe microscopy (SPM)-based systems where a piezoscanner is used to position a probe-tip relative to a sample surface, hysteresis causes 20% error in position. Such errors limit an SPM's ability for precise study and manipulation of nanostructures (e.g., [1]). A broad variety of hysteresis reducing techniques was proposed and implemented over the years by many researchers. Some of these methods take advantage of hysteresis correction provided by feedback of the displacement information [2], mathematical construction of hysteresis using Preisach [3], Maxwell [4] or other models. Driving piezoelectrics with charge or current rather than voltage also has been confirmed as a good way of hysteresis reduction [5]. However, charge control of piezos has its challenges, which include the DC offset potential drift of the transducer. In this paper authors present a charge/current feedback amplifier design that is capable of nullifying DC offset. The instrument was built to drive a Lightweight Composite Piezoceramic Actuator (LIPCA) [6]. Example results showing reduction of the displacement hysteresis are provided to confirm proper operation of the amplifier.

Design of the amplifier

The amplifier design was based on the following design requirements:

Tab. 1: *Design criteria*

Description	Value
Input voltage range	-300V to +600V
Input frequency range	< 5kHz
Dielectric constant of piezoelectric material	1250-2000
Capacitance	~100 nF
In-plane displacement	<1.5 mm

Figure 1 presents a block diagram of the amplifier. Two feedback loops were utilized: one that assures DC stability and creep-free performance and the other providing charge-feedback information. The charge monitor employed in the design is constructed using AD210 precision, wide bandwidth isolation amplifier (Fig. 2, [7]).

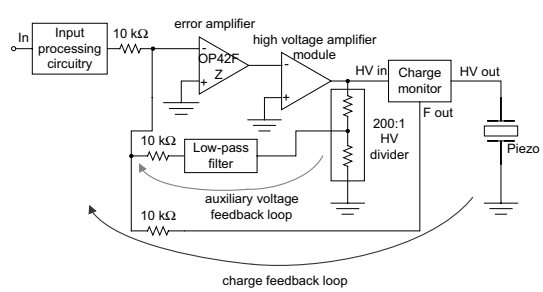

Fig. 1: *Block diagram of the amplifier.*

A charge monitor senses the current passing to and from the piezoelectric transducer. The charge information is sent back to an error amplifier which

is summed with the signal from a voltage divider output. The purpose of the voltage feedback is to obtain DC stability of the amplifier output, preventing additional charge accumulation which can lead to creep of the piezo device. The error amplifier commands the high voltage output stage to supply the voltage necessary to provide adequate charge to the transducer.

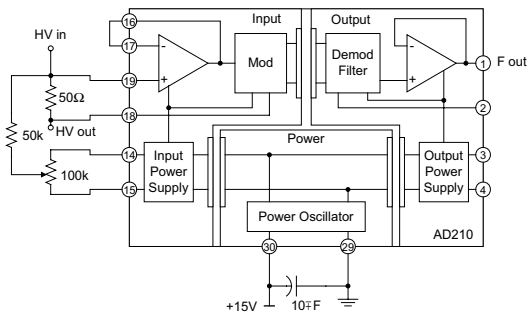

Fig. 2: *AD210 diagram [7].*

The bandwidth of the amplifier was tested under no load condition, and then with 100 nF (±20%) capacitive load (Figure 3). With the output current capability of 100 mA the amplifier can deliver the output power of 70 W, and the output current accuracy is 0.25 mA.

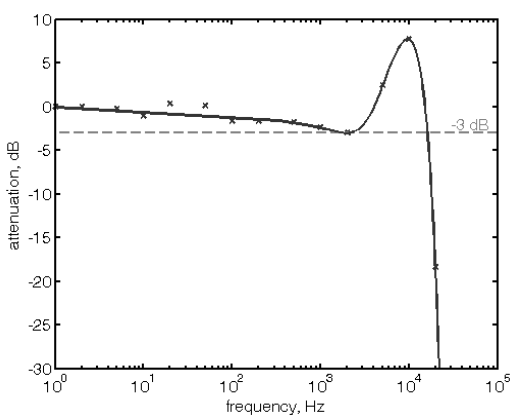

Fig. 3: *Bandwidth for 100 nF load.*

Performance verification of the amplifier

The amplifier's performance was tested with a Lightweight Composite Piezoceramic Actuator (LIPCA) device [6]. The details of the experiment were described elsewhere [8]. Figure 4 presents the test setup used. The LIPCA device was fixed, but free to rotate, at location A, and it can translate along the *x*-direction at location B. A laser-displacement sensor, NAIS Model ANR12511 (with gain of 2.0106 mm/V), measures the out-of-plane motion (in the *y*-direction) of the actuator. A computer (PC) equipped with a 12-bit National Instruments LabPC+ data acquisition (DAQ) board measures the sensor signal. The DAQ board also provides a command voltage for controlling the LIPCA device.

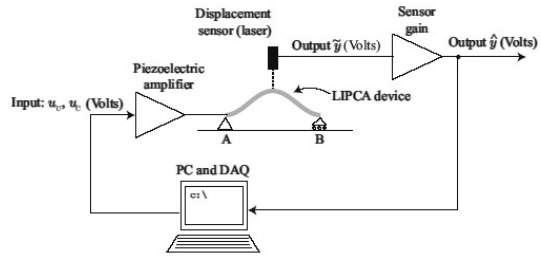

Fig. 4: *Test setup for the actuation vs. displacement test [7].*

The performance of the LIPCA device was compared between voltage-control and charge-control mode. In voltage control mode, the actuator was driven with a standard high-voltage amplifier (PZD 700, Trek, Inc.). A comparison was made between the displacement hysteresis of the voltage-control mode and of the charge-control mode. The displacement hysteresis for all experiments is defined as the difference in the measured output between the output response on the ascending and descending branches. In the experiments, we chose sinusoidal inputs with frequencies of 1 Hz, which are significantly lower than the lowest dominant resonant frequency of the LIPCA devices at 95 Hz. Additionally, sine inputs were chosen over triangle inputs because sinusoids do not contain high frequency components at the *turn-around points*, which can induce oscillations.

The experimental results are presented in Figures 5 and 6. Both figures show the hysteresis curves for the small (70 μm) and large (700 μm) range. In both voltage- and charge-control mode, for the small displacement range the resulting displacement hysteresis is relatively small. However, when the range increases, the difference is significant. In particular, the results show that charge control can reduce the displacement hysteresis from by over 80% when the range is 700 μm (see Figure 6). Therefore, the relationship between charge and displacement is more linear than between input voltage and displacement.

Conclusions

The experimental charge amplifier developed for the purpose of driving piezoelectric actuators allows for reduction of the undesirable hysteresis effect. Its performance was compared with that of the voltage piezo driver. Charge control of a LIPCA device

operated over a 700 µm displacement range reduces displacement hysteresis by over 80% [8].

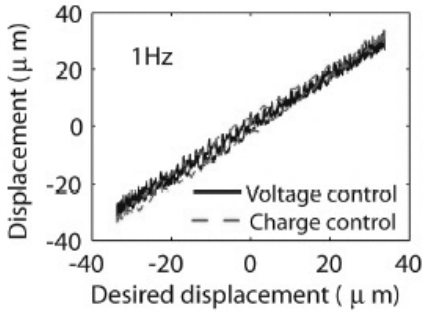

Fig.5: *Hysteresis for the desired displacement range of – 35 to +35 µm, input sinusoidal signal at 1Hz [8].*

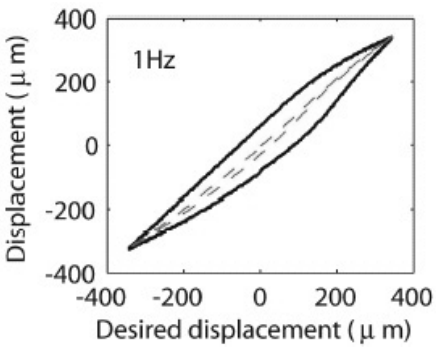

Fig.6: *Hysteresis for the desired displacement range of – 350 to +350 µm, input sinusoidal signal at 1Hz [8].*

References

[1] K. K. Leang and S. Devasia, "Design of hysteresis-compensating iterative learning control for piezo-positioners," Mechatronics, 16 (2006) 141-158.

[2] H. -J. Shieh, F.-J. Lin, P.-K. Huang and L.-T. Teng, "Adaptive tracking control solely using displacement feedback for a piezo-positioning system", IEEE Proc. Control Theory Appl., 151, 5 (2004), 653-660.

[3] P. Ge, M. Jouaneh, "Tracking control of a piezoceramic actuator", IEEE Trans. Contr. Syst. Technol., 4, 3 (1996), 209-219.

[4] M. Goldfarb, N. Celanovic, "Modelling piezoelectric stack actuators for control of micromanipulation", IEEE Control Syst., 17, 3 (1997), 69-79.

[5] K. Furutani, M. Urushibata, N. Mohri, "Displacement control of piezoelectric element by feedback of induced charge", Nanotechnology, 9 (1998), 93-98.

[6] A. Haris, N. S. Goo, H. C. Park, and K. J. Yoon, "Modeling and analysis for the development of Lightweight Piezoceramic Composite Actuators (LIPCA)," Computational Materials Science, 3 (2004), 474-481.

[7] AD210 Precision, Wide Bandwidth, 3-Port Isolation Amplifier - Specifications, Analog Devices.

[8] J. Beck, M. Noras, J. Kieres, J. E. Speich, K. M. Mossi, K. K. Leang, "Hysteresis characterization using charge-feedback control for a LIPCA device", SPIE Smart Structures and Materials and NDE for Health Monitoring and Diagnostics, San Diego. February 26 – March 2, 2006.