Last name _____

First name _____

LARSON—MATH 591—CLASSROOM WORKSHEET 04

1. Write the defining equation(s) for the variety $\mathbb{V}(y - x - 3)$.

2. Sketch the graphs of those equations.

3. Sketch $\mathbb{V}(y - x - 3)$.

4. Write the defining equation(s) for the variety $\mathbb{V}(y - x - 3, y + x + 5)$.

5. Sketch the graphs of those equations.

6. Sketch $\mathbb{V}(y - x - 3, y + x + 5)$.

7. Write the defining equation(s) for the variety $\mathbb{V}(xz, yz)$.

8. Sketch the graphs of those equations.

9. Sketch $\mathbb{V}(xz, yz)$.

An interesting example of a curve in $\mathbb{R}^3$ is the *twisted cubic*, which is the variety $\mathbf{V}(y - x^2, z - x^3)$. For simplicity, we will confine ourselves to the portion that lies in the first octant. To begin, we draw the surfaces $y = x^2$ and $z = x^3$ separately:

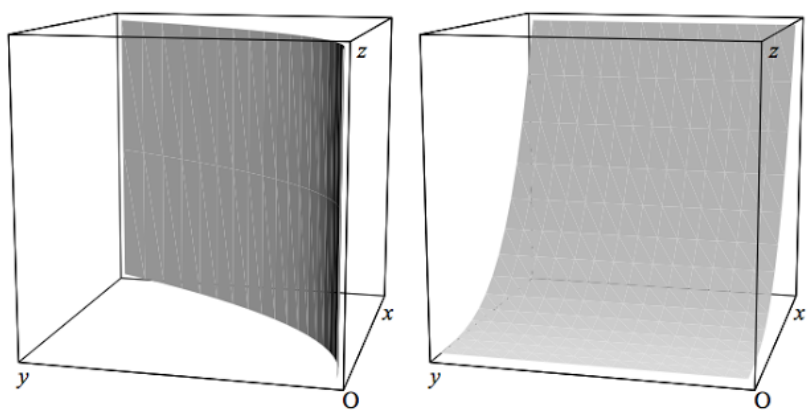

$y = x^2$ $\qquad$ $z = x^3$

Then their intersection gives the twisted cubic:

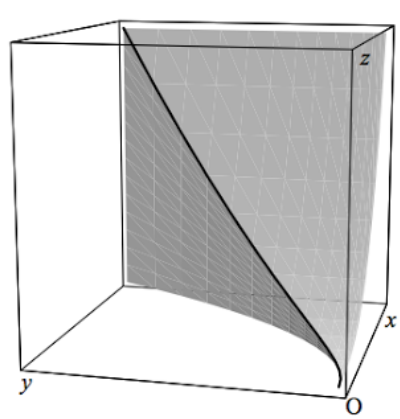

The Twisted Cubic